AGP™
Pellet Burning Stove



SAVE UP TO 26% WITH THE US FEDERAL BIOMASS TAX CREDIT
INCLUDES MODEL, ACCESSORIES, AND INSTALLATION
PLEASE CONSULT WITH YOUR TAX ADVISOR TO CONFIRM YOUR ELIGIBILITY FOR THIS TAX CREDIT

One of the Cleanest Pellet Stoves in the World!

The EPA certified Lopi AGP Pellet Stove offers all the benefits of wood heating plus fuel that is clean, compact and easy to use. The pellets are made from all-natural wood by-products that are safe for the environment and are a renewable resource. The AGP pellet stove features a unique HRD rotary disc feed system that is designed to efficiently burn ALL GRADES of wood pellets in order to produce a quick, convenient heat.

The Lopi AGP Pellet Stove is available with three finishing side panels, Black Paint shown above, Stainless Steel (Limited to Stock on Hand). or Rust Patina (Limited to Stock on Hand).

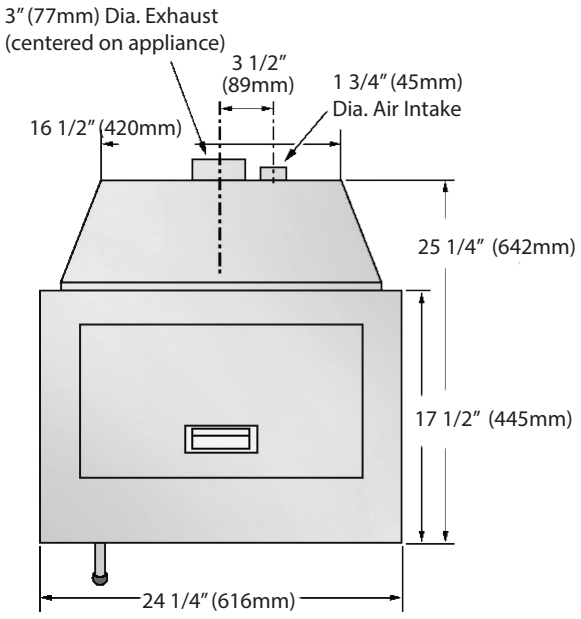

SPECIFICATIONS

- Heating Capacity*: Up to 2,000 square feet
- Emissions: 1.8 Grams Per Hour
- Hopper Capacity: 80 Lbs
- Maximum Burn Time: Up to 57 Hours
- Efficiency: Up to 76%
- Glass Viewing Area: Ceramic Glass 14-3/8" W x 9-1/4" H, 127 Sq. In.
- EPA Tested BTU Range: 8,959 to 34,738
- Burn Rate: 1.4 to 5 Pounds Per Hour
- Venting: 3"

** Heating capacity may vary depending on degree of home insulation, floor plan and ambient temperature zone of the area you live.*

Use these illustrations as a guide only. For complete installation instructions please refer to your Lopi Dealer or go to the AGP Pellet product page at www.lopistoves.com.

NOTE: Improper installation of your pellet appliance or failure to operate it in accordance to the guidelines detailed in the Owner's Manual may negate your warranty and endanger your home and family.

MINIMUM CLEARANCES TO COMBUSTIBLE WALLS

Stove clearances measured from Top of Stove. Connector clearances measured from exhaust vent.

Straight Wall
Through The Wall Installation

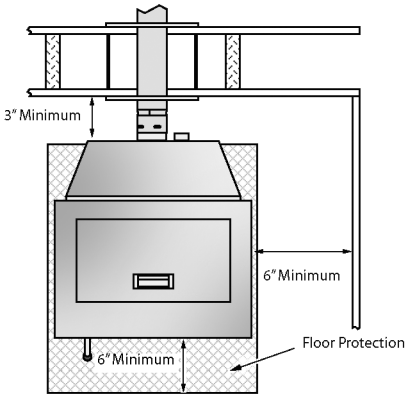

Interior Vertical Vent Installation

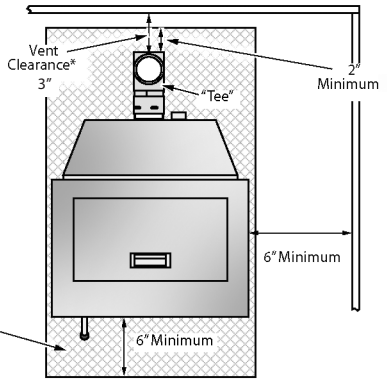

Corner
Through The Wall Installation

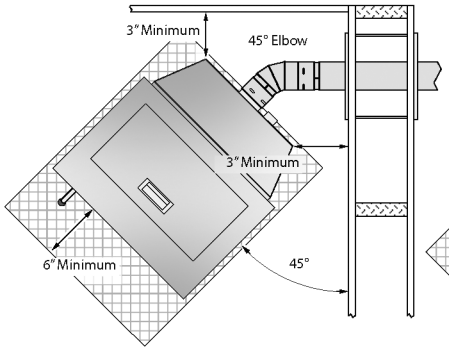

Interior Vertical Vent Installation

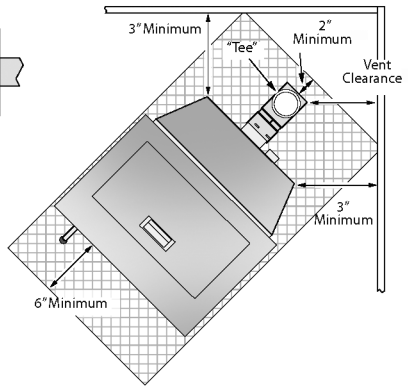

FLOOR PROTECTION

The pellet stove must be installed on a non-combustible surface protector extending the full width and depth of the heater and extending 6" (153mm) in front and 2" (51mm) to each side and under the rear exhaust Tee. Hearth protection must be a minimum .018" thick (26 gauge).

ALCOVE REQUIREMENTS

When installed in an alcove with a ceiling height less than 7 ft (2.134 M).

- Minimum Height is 60" with 6" side and 3" rear clearance to wall.
- Minimum Width is 36-9/16" with min. clearance of 3" for horizontal venting.
- Maximum depth is 48" with minimum clearance of 2" from pipe for vertical venting.

CHILD SAFETY

If you have small children at home or visiting, we recommend you purchasing a safety screen or guard to prevent accidental contact with the hot surfaces of the stove.



TESTING

Listed Pelletized Solid Fuel Burning Appliance. Also for use in mobile homes. Certified for the US and Canada. Conforms to ASTM E1509-04, Room Heater Pellet Burning Type (UM) 84 HUD; Certified to ULC S627. Tested and listed for mobile homes in accordance with OAR 814-23-900 through 814-23-909. Tested and Listed by Intertek.